INDIAN INSTITUTE OF TECHNOLOGY KHARAGPUR

भारतीय प्रौद्योगिकी संस्थान खड़गपुर

INDIAN INSTITUTE OF TECHNOLOGY KHARAGPUR

KHARAGPUR, WEST BENGAL 721302

E -TENDER DOCUMENT

for

Modification of 3 phase power line from two nos. separate sources to the Netaji Audi. And also to the Raman Audi. in the Institute Main Building, IIT Kharagpur

NIT No.: IIT/E/E&M/T/76/2019-20

Notice Invitation Tender Serial No. IIT/E/E&M/T/76/2019-20 *dated-16.01.2020*

Tender Serial No. _____ *Issued to:*

……

……

……

INDIAN INSTITUTE OF TECHNOLOGY KHARAGPUR

Contents

1. NOTICE INVITING TENDER 2
1.1. INTRODUCTION 2
1.2. PARTICULARS 2
1.3. ELIGIBILITY CRITERIA 2
2. INFORMATION TO BIDDERS 4
2.1. SCOPE OF WORK 5
2.2. GENERAL INSTRUCTIONS 5
2.3. SUBMISSION OF TENDER 6
2.4. EVALUATION OF BIDS AND AWARD OF WORK 6
3. UNDERTAKING BY THE BIDDER 07
4. Annex-I 08
5. Checklist for Documents to be uploaded on 09
6. Drawing 10-11
7. Specification 12
8. Special Condition for Electrical work 13-14
7. Instructions related with BOQ 14
8. *Schedule of Quantities (BOQ).....uploaded separately in BOQ section on https://eprocure.gov.in/eprocure/app*

भारतीय प्रौद्योगिकी संस्थान खड़गपुर

INDIAN INSTITUTE OF TECHNOLOGY KHARAGPUR
भारतीय प्रौद्योगिकी संस्थान खड़गपुर

1. NOTICE INVITING TENDER

1.1. INTRODUCTION

Indian Institute of Technology (IIT) Kharagpur, hereinafter called IITKGP, invites sealed tenders from the eligible contractors for "**Modification of 3 phase power line from two nos. separate sources to the Netaji Audi. And also to the Raman Audi. in the Institute Main Building, IIT Kharagpur".** Particulars of the project are as following.

1.2. PARTICULARS

1.NIT Number	IIT/E/E&M/T/76/2019-20
2.Name of Work	**Modification of 3 phase power line from two nos. separate sources to the Netaji Audi. And also to the Raman Audi. in the Institute Main Building, IIT Kharagpur**
3.Location of Work	Institute academic area at IIT Kharagpur, Kharagpur-721302
4.Estimated Cost(including GST)	₹ 5,54,675/-(Rupees Five lakhs Fifty four thousand Six hundred and Seventy five only)
5.Earnest Money Deposit	₹ 11,094/- (Rupees Eleven thousand and Ninety four only) ***[Not mandatory for bidders registered under MSE category]***
6.Time Limit	**90 days**. days from Date of start
7.Tender Basis and Mode	Two stage (Technical Bid & Financial Bid)
8.Mode of Payment to IITKGP(EMD/Tender fee)	i) Original Demand Draft/Pay Order or copy of valid registration certificate under MSE category has to be submitted physically at the office of SE (E&M) on or before the due date/extended date of submission of bid. & Scanned copy of Demand Draft/Pay Order/Registration under MSE category has to be uploaded on *https://eprocure.gov.in/eprocure/app* ii) Demand Draft/Pay order to be drawn in favour of IIT KHARAGPUR payable at Kharagpur.
9.Closing Date & Time for Receipt of bids	**04th February 2020** up to 15:30hrs
10.Date& Time for Opening Technical of Bid	**05th February 2020** at 16:30 hrs
11. Date& Time for Opening of Price Bid	**To be informed later to the successful bidder**
12. Engineer-in-charge and contact details.	Mr. Sabyasachi Ghosh, Senior Executive Engineer Tel: 03222-282522_____, Email: sghosh@hijli.iitkgp.ernet.in
13. Address for tender issue, submission and opening	Office of Senior Executive Engineer(Electrical),1st Floor, Old Building, IIT Kharagpur, Kharagpur WB 721302
14.Website for full and updated *publishing* information	***https://eprocure.gov.in/eprocure/app*** http://www1.iitkgp.ac.in/topfiles/tenders.php
16. Website for tender submission & processing (This is e-Tender only submission by Online)	***https://eprocure.gov.in/eprocure/app***

1.3. ELIGIBILITY CRITERIA

1.3.1. The bidder must be registered in appropriate class of works with Government organization like CPWD/ PWD/ MES or PSUs or those having experience in similar nature of works awarded by Government / Semi Government Organizations/ Government Funded Autonomous Organization.

1.3.2. The bidder must have done at least 1 (ONE) similar work of value of 80% of the estimated cost **or** 2 (TWO) similar works for projects each of value 60% of the estimated cost **or** 3(THREE) similar work for projects each of value 40% of the estimated cost with Government/ Semi-government/ PSU/ Government Funded Autonomous Organization during last **7 (seven) years** preceding last date of the month of tender submission.

Note:

(i) The estimated cost is **Rs. 5,54,675/-(Rupees Five lakhs Fifty four thousand Six hundred and Seventy five only)**

(ii) The value of executed works shall be brought to current costing level by enhancing the actual value of work at simple rate of 7% per annum; calculated from the date of completion to the last date of receipt of applications for tender.

(iii) **Similar works shall mean:** Electrical renovation and modification works

1.3.3. **Special condition for associate consultant:** Not Applicable

This work includes an item in **Part II of BoQ** for detailed design and drawing work including structural and architectural, electrical, S&P. Bidders shall associate themselves with the consultant eligible for comprehensive consultancy work at least for 1 (one) similar project costing 80% of the estimated cost or 2 (two) similar projects for each value 60% of the estimated cost or 3 (three) similar projects each value 40% of the estimated cost.
The bidder hast to submit document in support of eligibility of their associate consultant.

1.3.4. The bidder or the specialized agency the bidder intends to associate with must be registered with appropriate government authority as a bonafide business entity and must have GST registration certificate and Permanent Account Number of income tax.

1.3.5. Electrical work shall be executed by selected bidder through agency holding electrical license valid on date of execution.

1.3.6. The validity of the registrations and licenses should be valid as on the date of tender submission.

Sd/-
Mr. S. Ghosh,
Senior Executive Engineer (EW)
On behalf of the **Director, Indian Institute of Technology Kharagpur**

Copy to:

1) Chief Engineer
2) Superintending Engineer (E&M)
3) Superintending Engineer (Civil)
4) Chief System Manager
5) Mr. M. Kumar, Senior Executive Engineer (EW)
6) Executive Engineer (Telephone)
7) Engineer/Assistant Engineer/ Junior Engineer (E&M)
8) Notice Board
9) Tender Notice uploaded to CPPP portal & Institute Website

Office file

INDIAN INSTITUTE OF TECHNOLOGY KHARAGPUR
भारतीय प्रौद्योगिकी संस्थान खड़गपुर

2. INFORMATION TO BIDDERS

2.1. GENERAL INSTRUCTIONS

2.1.1. The IITKGP intends to award the work of "**Modification of 3 phase power line from two nos. separate sources to the Netaji Audi. And also to the Raman Audi. in the Institute Main Building, IIT Kharagpur** The work consists of comprehensive repair, renovation and modification of existing electrical systems.

2.1.2. Constraint: The job needs to be executed in Residential area without causing any disturbances to the Residence of campus quarters and hostel resident and also road networks.

2.1.3. The vendor shall work out execution sequence and methodology so as to complete the project within the envisaged time and the estimated cost, duly handling the constraint mentioned above.

2.1.4. Bidding documents are to be obtained electronically through websites: ***https://***eprocure.gov.in/eprocure/app

http://www1.iitkgp.ac.in/topfiles/tenders.php.

2.1.5. This bid document shall be read in conjunction with GCC (General Conditions of Contract) available on http://www1.iitkgp.ac.in/topfiles/tenders.php.

2.1.6. The bidder shall visit and inspect the site and obtain all information on his own responsibility and at own cost, which may be necessary for the purpose of quoting and submitting the tender. No excuse or ignorance as to site conditions and local information shall be accepted after awarding of the contract. Access to the site will be granted by the Engineer-in-charge on all working days within working hours.

2.1.7. IITKGP shall not provide any space at site for labour hutments.

2.1.8. All clarifications about the tender shall be sought by bidder on or before **04th February 2020 upto** 3.30 pm through e-mail to the Engineer-in-charge on sghosh@hijli.iitkgp.ernet.in

2.1.9. Completion certificate issued by Competent Authority will only be considered as credential. If the Completion certificate issued by Competent Authority does not reflect the type of work, then Final bill / Schedule of Quantity of the qualifying works also to be attached along with the Completion certificates. Certificate from private individuals / organizations for whom such works have been executed shall not be accepted.

2.1.10. The bidding document (consisting of specifications, the schedule of quantities of various types of items to be executed, the set of terms and conditions of the contract and other documents / drawings, if any), Addendum/Corrigenda, Clarifications to Pre-bid queries can be downloaded from the websites: i)https://eprocure.gov.in/eprocure*/app*

2.1.11. http://www1.iitkgp.ac.in/topfiles/tenders.php; *iii)https://eprocure.gov.in/eprocure/app*. Corrigenda, if any shall be published only on these websites *at any time before the closing time of tender.* The institute shall not be responsible for any delay / difficulties / inaccessibility of downloading facility for any reason whatsoever. *The tenderers who have downloaded the tender documents from website must visit the website and ensure that such addendum(s)/corrigendum(s) (if any) is also downloaded by them. This shall be the responsibility of the prospective registered bidders to check the web site for any such corrigendum/addendum before closing time of tender and ensure that bid submitted by them are in accordance with all the corrigendum's/addendums.*

2.1.12. All costs, charges & expenses that may be incurred in connection with the preparation of his tender shall be borne by him and the Institute accepts no liability whatsoever therefore.

2.1.13. **Rates quoted by the bidders shall be inclusive of GST (Goods and Services Tax - Central, State and Interstate) and all applicable taxes. Income Tax and all other statutory deductions like labourcess etc. will be deducted from the bill as per prevailing rules.**

2.1.14. Exemption to IITKGP against any tax/ duty/ fee/ surcharge/ charge/ cost, if any, found applicable or sought later from IITKGP after award shall be passed on to IITKGP by the contractor without dispute.

2.1.15. IITKGP reserves the right to reject any or all of the bids without assigning any reason.

2.1.16. **Bid Validity:** Bid shall remain valid for 120 days from the date of submission.

2.1.17. **Firm Price: Bidder's quoted Rates/Prices for executing the activities under the Contract shall remain firm till completion of the entire work & shall not attract any escalation under any circumstances whatsoever.**

2.1.18. If any information furnished by the bidder is found as false / fabricated, then his bid will be rejected and treated as cancelled. Even if the such manipulation is detected at any stage after signing of the contract, it would lead to termination of the contract besides forfeiture of Earnest Money Deposit and liabilities towards prosecution. In such cases the bidder will be debarred from participation in future tendering process in IITKGP for next 05 (Five) years.

2.1.19. **Earnest Money Deposit (EMD)** of requisite amount and that in prescribed mode or proof of payment thereof shall be enclosed with the Technical Bid explained in following section.

INDIAN INSTITUTE OF TECHNOLOGY KHARAGPUR
भारतीय प्रौद्योगिकी संस्थान खड़गपुर

2.1.20. Refund / Conversion of Earnest Money Deposit: The Earnest Money received shall be refunded to the unsuccessful bidders without any interest after the opening of financial bids. The Earnest Money Deposit of successful bidder shall be retained and converted into part of Security Deposit.

2.1.21. Forfeiture of Earnest Money Deposit: Earnest Money Deposit will be forfeited in any of the following cases:

(i) The bidder withdraws / modifies his tender during the period of Bid Validity.

(ii) The bidder, in case of tie between lowest bids, refuse to submit revised offer.

(iii) The bidder does not accept the correction of arithmetical errors of his tender.

(iv) The bidder fails to deposit Performance Guarantee and information as per format given in GCC within the stipulated time period before award of the work.

2.2. SUBMISSION OF TENDER

2.2.1. ***Help for Contractors, FAQ, Information about DSC and Bidders Manual Kit containing the detailed guidelines for e-Procurement system are also available on Central Public Procurement Portal.[*** **https://eprocure.gov.in/eprocure/app]**

2.2.2. ***It is mandatory for all the bidders to have a valid Class-II/Class-III Digital Signature Certificate (in the name of person having power of attorney to sign the Bid) from any of the licensed Certifying Agency (Bidders can see the list of licensed CA's from the link www.cca.gov.in) to participate in e-Procurement of IIT KHARAGPUR.***

2.2.3. ***It is mandatory for the bidders to get their firm /company registered with e-procurement portal https:// eprocure.gov.in/eprocure/app to have user ID & password.***

2.2.4. ***Tender documents will be available online on website https://eprocure.gov.in/eprocure/app which can be downloaded free of cost.***

2.2.5. ***Bidders may download and refer the "Instructions for Online Bid Submission" from (https://eprocure.gov.in/eprocure/app;jsessionid=A8B54EEC72D86DF9AA9D9B2DDACDAB8D.eprocgep4?page= BiddersManualKit&service=page).***

2.2.6. ***The tender documents shall be submitted online in the prescribed format given on the websites and technical bids received online shall be opened as per NIT or Corrigendum thereof. No other mode of submission is acceptable. Detailed credentials as per the requirement of eligibility criteria and all tender papers except Bill of Quantities are to be submitted in "Technical Bid".***

Bill of Quantities with rates duly filled in are to be submitted in the format provided online in the name of "Financial Bid". Hence, physical submission of the documents is limited to submission of original Earnest Money Deposit in the form of Pay Order/ Demand Draft / Bank Guarantee/MSE registration certificate as per provision given in sub-clause 1.2.5 of NIT & 2.2.15 of Information to Bidders.

Representative of the bidder, who chooses to attend, may attend the online opening of the technical bids on the scheduled date and time of Bid opening. However, such representatives shall be allowed to attend the opening of the Technical Bids, only, if such person presents the letter of authority issued in his name by the bidder on his letter head.

2.2.7. ***Bidders cannot submit the tender after the due date and time of e-bid submission. Time being displayed on Central Public Procurement Portal https://eprocure.gov.in/eprocure/app ("Server System Clock Time") shall be final and binding on the bidder. e-Bids are required to be submitted by bidders, only as per the Indian Standard Time (IST) and not the time as per their location/country.***

2.2.8. ***The bidders are advised to submit their e-bids well before the e-bid due date. IIT KHARAGPUR shall not be responsible for any delay in submission of e-bids for any reason including server and technical problems.***

2.2.9. ***The Technical and Financial Bid shall be digitally signed by the Authorized Signatory of the bidder & submitted "on-line" only. The authorized signatory of the bidder must be in possession of Power of Attorney before submitting the digitally signed bid. Scanned copies of various documents can be prepared in .pdf file format.***

2.2.10. ***Any tender received without original Earnest Money in the form as specified in clause 1.2.8 of tender documents shall not be considered and shall be summarily rejected.***

2.2.11. ***IIT KHARAGPUR reserves the right to cancel the tenders before submission/opening of tenders, postpone the tender submission/opening date and to accept/reject any or all tenders without assigning any reasons thereof. IIT KHARAGPUR's assessment of suitability as per eligibility criteria shall be final and binding.***

INDIAN INSTITUTE OF TECHNOLOGY KHARAGPUR
भारतीय प्रौद्योगिकी संस्थान खड़गपुर

2.2.12. ***Tenderers may note that they are liable to be disqualified at any time during tendering process in case any of the information furnished by them is not found to be true. EMD of such tenderer shall be forfeited. The decision of IIT KHARAGPUR in this regard shall be final and binding.***

2.2.13. **The sealed *EMDs* shall be received at the Office of Senior Executive Engineer(Electrical),1st Floor, Old Building, IIT Kharagpur, Kharagpur WB** 721302**, up to 15:30hrs, 04th February 2020 or Corrigenda otherwise**. EMD received after the due date and time shall not be considered. *The EMDs* shall be submitted in a sealed envelope super scribed "Modification of 3 phase power line from two nos. separate sources to the Netaji Audi. And also to the Raman Audi. in the Institute Main Building, IIT Kharagpur" with NIT No. IIT/E/E&M/T/76/2019-20 *as NIT No*., clearly super scribed as "EMD "

2.3. EVALUATION OF BIDS AND AWARD OF WORK

2.3.1. The Bid of bidder will be opened on the specified date and time. Bids shall, first, be checked for payment of Earnest Money Deposit. Only those bids found to have duly paid/ submitted Tender Fee and Earnest Money Deposit shall be considered for evaluation.

2.3.2. Evaluation of Technical Bid: The bids received will then be assessed on the eligibility criteria mentioned at para 1.3of Notice Inviting Tender. Bids found not meeting the eligibility criteria shall be considered non-responsive and shall be rejected summarily.

2.3.3. IITKGP retains the right to revert back to individual bidders with further clarifications / queries on the Technical Bid. The bidder has to respond to the queries within the specified time mentioned in the covering letter.

2.3.4. On the date & time specified for opening of Financial Bid or the Revised Financial Bids as the case may be will be opened on specified date and time.

2.3.5. EVALUATION OF Financial Bids: The Financial Bid should contain the complete bid document with duly filled in Schedule of Financial Quote. Financial Bids opened as above will be checked for arithmetical errors.

2.3.6. Letter of Award (Work Order) shall be issued to the successful bidder only after receipt of the Program Schedule and details of Technical Staffs to be deployed for the work along with Complaint Redressal Mechanism as per following para.

2.4.8 (a) Contractor shall submit Complaint redressal arrangement with name & contact number of the contractor's authorized representative for the purpose.

2.3.7. Agreement (Contract) consisting of complete tender document including conditions, bill of quantities, technical proposal and specialized services, drawings, if any, and acceptance thereof together with any correspondence leading thereto, shall be drawn and signed with the awardee within 10 days of the Letter of Award.

2.3.8. Date of start of work shall be reckoned from the 10th day of the issue of the Work Order.

2.3.9. Defect Liability Period (DLP): In partial modification to clause no.16 of General Conditions of Contract (GCC), the Defect Liability Period shall be 12 months after the certificate final or otherwise of its completion of work or till the final bill has been prepared.

2.4. COMPLAINT REDRESSAL MECHANISM

2.4.1. All maintenance complaints shall be got addressed by the contractor to the satisfaction of Engineer-in-charge within 3 days from the date of issuance of the "Job Card" from IIT Kharagpur.

2.4.2. Complaints requiring completion time more than 3 days shall be responded specifically by the contractor with the scheme, in consultation with Engineer-in-charge, and timeline for compliance, to the Engineer-in-charge within 3 days from the date of issuance of the "Job

2.4.3. Any complaint left unattended by the contractor beyond 3 days without specific reasons on record shall attract levy of penalty of Rs 50/- per complaint per day from 4th day to 7th day and Rs 100/- per complaint per day thereafter recoverable from dues to the contractor.

3. UNDERTAKING BY THE BIDDER

INDIAN INSTITUTE OF TECHNOLOGY KHARAGPUR

U N D E R T A K I N G

I / We have read and examined the Tender document including terms & conditions, specifications, bill of quantities, drawings and designs, general rules & directions, General Conditions of Contract, Special Conditions of Contract and all relevant other documents, publications and rules referred to in the Conditions of Contract and all other contents in the tender documents for the work.

I / We, hereby tender for execution of the work specified for the Indian Institute of Technology Kharagpur within the time specified and in accordance in all respects with the specifications, designs, drawings and instructions in writing.

We agree to keep the tender open for 120 days from the last date of its submission and not to make any modifications in its terms and conditions. A sum of Rs. _____ has been deposited in cash / demand draft of a scheduled bank / Pay order as earnest money. If I / we, fail to furnish the prescribed performance guarantee within prescribed period, I / we agree that the said Director, Indian Institute of Technology Kharagpur or his authorized officer shall without prejudice to any other right or remedy, be at liberty to forfeit the said earnest money absolutely. Further, if I / we fail to commence work as specified, I / we agree that the Director, Indian Institute of Technology Kharagpur shall without prejudice to any other right or remedy available in law, be at liberty to forfeit the said earnest money and the performance guarantee absolutely, otherwise the said earnest money shall be retained by him towards security deposit to execute all the works referred to in the tender documents upon the terms and conditions contained or referred to therein.

Further, I / We agree that in case of forfeiture of earnest money or both Earnest Money & Performance Guarantee as aforesaid, I / We shall be debarred for participation in the re-tendering process of the work.

I / We hereby declare that I / We shall treat the tender documents, drawings and other records connected with the work as secret / confidential documents and shall not communicate information derived there-from to any person other than a person to whom I / We am / are authorized to communicate the same or use the information in any manner prejudicial to the safety of the State.

Seal & Signature of Contractor

Postal Address

Dated

Witness

Address

Occupation

भारतीय प्रौद्योगिकी संस्थान खड़गपुर

INDIAN INSTITUTE OF TECHNOLOGY KHARAGPUR

ANNEXURE-I

TECHNICAL STAFF OF CONTRACTOR

Name of the Work: Modification of 3 phase power line from two nos. separate sources to the Netaji Audi. And also to the Raman Audi. in the Institute Main Building, IIT Kharagpur

DISCIPLINE	NAME	QUALIFICATION	EXPERIENCE	CONTACT NUMBER
Overall Project In-charge				
Engineer - Structure and Civil Works				
Engineer – Electrical & Mechanical Works				
In-charge - Safety, Health & Environment				
In-charge for Maintenance (DLP) period				

Seal & Signature of Contractor

भारतीय प्रौद्योगिकी संस्थान खड़गपुर

INDIAN INSTITUTE OF TECHNOLOGY KHARAGPUR

1. Checklist for Documents to be uploaded on *https://eprocure.gov.in/eprocure/app*

Sl. No.	Documents	Reference
1.	Tender Documents	2.3
2.	EMD	1.2.8
3.	Company registered by Govt. Organisation like CPWD/PWD/MES/Autonomous bodies or Other PSUs	1.3.3
4.	GST Registration Certificate	1.3.3
5.	Permanent Account Number	1.3.3
6.	Completion Certificate during last 07yrs.	1.3.2
7	Updated Electrical Contractor Licence	
8	ANNEXURE-I	

भारतीय प्रौद्योगिकी संस्थान खड़गपुर

Signature of contractor

INDIAN INSTITUTE OF TECHNOLOGY KHARAGPUR

SLD for
Institute Maintenance(Sec-II) at I.I.T kharagpur.

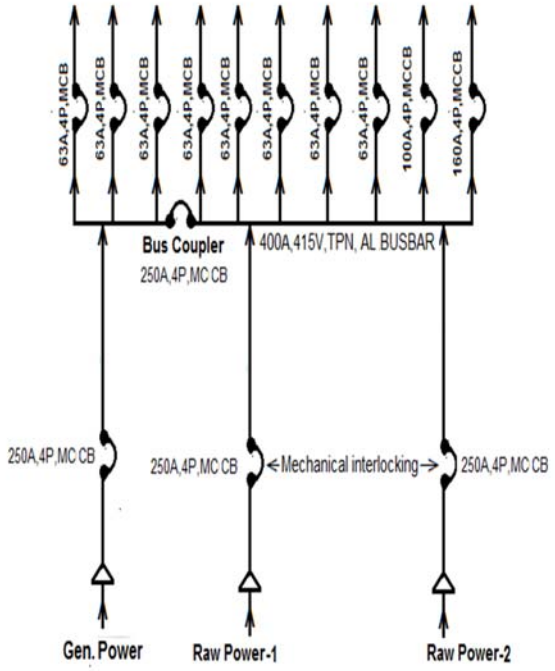

Prepared by	Checked by
PANU DAS **Jr.Engineer** **Estate (E&M)**	P PAL Engineer Estate (E&M)

भारतीय प्रौद्योगिकी संस्थान खड़गपुर

INDIAN INSTITUTE OF TECHNOLOGY KHARAGPUR
भारतीय प्रौद्योगिकी संस्थान खड़गपुर

Electrical Outdoor type Panel for Institute Maintenance(Sec-II) at I.I.T kharagpur.

FRONT VIEW

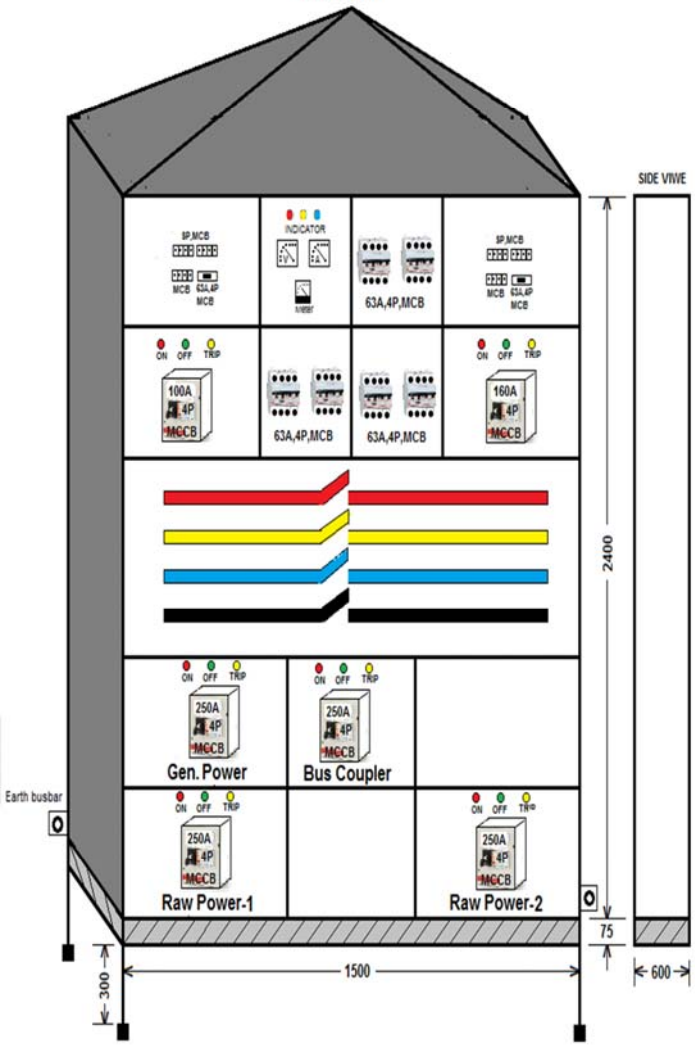

SIDE VIWE

General Notes:-

1. All dimention are in mm unless otherwise stated.
2. Panel shall be of 10SWG(3MM) thick CRCA sheet steel.
3. Degree of protection:IP: 65
4. All opening shall be covered by rubber gasket
5. Each door shall be earthed with pvc insulated multistrand copper wire.
6. 40x10 mm Al busbar for phase & netural
7. 50x6x1no GI strip for earth bar
8. Connection between busbar and MCCB shall be connected by spreader link
9. Arrangement for cable entry & exit should be from top & bottom with detachable gland plate.

Prepared by

PANU DAS
Jr.Engineer
Estate (E&M)

Checked by

P PAL
Engineer
Estate (E&M)

INDIAN INSTITUTE OF TECHNOLOGY KHARAGPUR
भारतीय प्रौद्योगिकी संस्थान खड़गपुर

Outdoor Type Panel

Description

Supply, erection, testing and commissioning of totally type tested as per IEC:13947:1993andIEC:61479 Feeder Pillar unit made out of 10SWG CRCA sheet steel material with conicle top canopy.This should be modular type compartmentalised, dust and vermin proof, mounted on angle iron frame at a height 2.5foot from ground level on masonry structure of suitable size of the following types. The back side of the feeder pillar should be opeanable type.

Incoming switch:-

1) 250A,4P,16KA,MCCB-3nos +1no as Bus Coupler

Outgoings:-

a)160A,4P,16KA,MCCB-1nos. b)100A,4P,16KA,MCCB-1nos. c)63A,4P,10KA,MCB-8nos. d) 10-32A,SP,10KA,MCB-24nos.

All the MCCB units should have: ON,OFF,TRIP indicationsshould have extended rotary handle and spreader links for terminations and should have ICS=100%ICU

All the MCB units should have "stud type"connections for taking outgoing supply.The panel should be equiped with digital type voltmeter,ammeter with CT'S and selector switches and multifunction meter.

TPN Aluminium Bus Bar: The TPN AL Busbar capacity should be 400 amps with coloured insulated &sleeved.(Aluminium bars: 40mmx10mm,1no for phase and neutral) Bus bar supports of epoxy resin molded or FRP type insulator. Neutral & phase bars should have the same dimention.

Approx Dimension: 2400mmx1500mmx600mm.

Earth Bar: Should be with 50mmx6mm GI flat covering the entire length of the panel.

Colour: Should be power coated with 'OPALING GREEN'/equivalent after 7 tank chemical treatment processing.

Make:L&T**,** Legrand/Siemanse/Schneider/ABB(MCCB,MCB),L&T (Ammeter,voltmeter)/ equivalent approved by EIC

Note:

1) The contractor should submit the GA and electrical layout diagram mentioning the make of each item for getting the approval from the INSTITUTE before placing order for fabrication.

2) The panel should be guranted for one year after successfull commissioning at site.

3) The contractor is liable to arrange testing of the Feeder Pillar cum metering panel at the factory for the Institute representative before despatch at site. 4) The Panel will be of double door type.

Approved panel manufacture by the Institute.

Authorized TTA -Panel builder of L&T/Legrand/Siemense/ABB/Schneider

Note:-All materials to be used needs prior approval of Engineer -in -charge.
Any equivalent make use needs approved by Engineer-in-charge.

Schedule of quantities uploaded on the BOQ section on *https://eprocure.gov.in/eprocure/app*

INDIAN INSTITUTE OF TECHNOLOGY KHARAGPUR

भारतीय प्रौद्योगिकी संस्थान खड़गपुर

Special Condition for Electrical work

1. The work shall be carried out as per national code or C. P. W. D specifications for works with correction slips issued up-to date unless otherwise specified in the schedule of quantities for the works.
2. The following Indian Standard Specifications and Codes of Practice will apply to the equipment and the work covered by the scope of this contract. In addition the relevant clauses of the Indian Electricity Act 1910 and Indian Electricity Rules 1956 as amended upto date shall also apply. Wherever appropriate Indian Standards are not available, relevant British and/or IEC Standards shall be applicable.

   BIS certified equipment shall be used as a part of the Contract in line with Government regulations. Necessary test certificates in support of the certification shall be submitted prior to supply of the equipment.

   It is to be noted that updated and current Standards shall be applicable irrespective of those listed below.

Low voltage Switchgear and Controlgear specifications	IS 13947 : 1993
Part I – General	
Part 2 – Circuit Breakers	
Part 3 – Switch Fuse Units	
Part 4 – Contactors and Motor Starters	
Part 5 – Control Circuit Devices	
Electrical Relays for power system protection	IS 3231 : 1986
Low voltage Switchgear and Control gear assemblies	IS 8623 : 1993
Marking of Switchgear busbars	IS 11353 : 1985
Degree of Protection of Enclosures for low voltage switchgear	IS 2147 : 1962
Code of Practice for selection, installation and maintenance of Switchgear	IS 10118 : 1982

4. No under-ground work or above the false ceiling shall be covered until the same has got approved by the Engineer-in-charge. The contractor will supply the drawings of specific works for approval, if required
5. All the old wiring has to be dismantled with proper care. The reusable old materials if any are to be handed over to departmental store with proper documentation and the other non reusable (nil reselling value) will be disposed by the contractor. The contractor shall clear the site thoroughly of all scaffolding materials & rubbish etc. left out of his work & dress the site around the building to the satisfactions & his decision in writing shall be final & binding on all concerned
6. Special care to be taken to avoid any theft of electrical fittings and fixtures while executing the work.
7. The location of Panel / DB / Switch board / Light point / Fan point will be as per existing location or as per the instruction of Engineer-in-charge.
8. All the wiring will be done with feruling and cable / Wire termination by required size or lugs of required materials and It should be noted that license wire man shall only be allowed for the wiring work.

Electrical safety at work site

The contractor will identify one of the supervisors for taking care of implementation of Safety systems.

The Contractor should follow the following General Guidelines governing the safety rules as laid down under:

Usage of eye protection equipment shall be ensured when workmen are engaged for grinding, chipping, welding and gas-cutting. For other jobs as and when site safety co-coordinator insists eye protection has to be provided.

1. All safety appliances like Safety shoes, Safety gloves, Safety helmet, Safety belt, Safety goggles etc. shall be arranged before starting the job.
2. All excavated pits shall be barricaded & barricading to be maintained till the backfilling is done. Safe approach to be ensured into every excavation.
3. All the dangerous moving parts of the portable / fixed machinery being used shall be adequately guarded.
4. Ladders being used at site shall be adequately secured at bottom and top. Ladders shall not be used as work platforms.

INDIAN INSTITUTE OF TECHNOLOGY KHARAGPUR

5. Material shall not be thrown from the height. If required, the area shall be barricaded and one person shall be posted outside the barricading for preventing the tre-passers from entering the area.

6. Other than electricians no one is allowed to carry out electrical connections, repairs on electrical equipment or other jobs related thereto.
7. All electrical connections shall be made using 3 or 5 core cables, having a earth wire.

8. Inserting of bare wires for tapping the power from electrical sockets is completely prohibited.

9. A tools and tackles inspection register must be maintained and updated regularly.

10. Debris, scrap and other materials to be cleared from time to time from the workplace and at the time of closing of work every day.

11. All the unsafe conditions, unsafe acts identified by contractors, reported by site supervisors and / or safety personnel to be corrected on priority basis.

12. No children shall be allowed to enter the workplace.

13. All the lifting tools and tackles shall be stored properly when not in use.

14. Clamps shall be used on Return cables to ensure proper earthling for welding works.

15. All the pressure gauges used in gas cutting apparatus shall be in good working condition.

16. Proper eye washing facilities shall be made in areas where chemicals are handled.

17. Connectors and hose clamps are used for making welding hose connections.

18. All underground cables for supplying construction power shall be routed using conduit pipes.

19. Spill trays shall be used to contain the oil spills while transferring / storing them.

20. Tapping of power by cutting electric cables in between must be avoided. Proper junction boxes must be used.

21. Non-compliance to above shall invite a penalty recovery as per 3.22.8.

भारतीय प्रौद्योगिकी संस्थान खड़गपुर